LSK-P
Power Factor Correction Systems – detuned

Ready to connect, automatic Power Factor Correction Systems in sheet steel cabinets for wall mounting. Detuned – for low-voltage networks with harmonic content.

- Power Range: 17.5 to 100 kvar
- Compact design in sheet steel cabinet for wall-mounting
- Ready for connection
- Fully automatic and intelligent Power Factor Control Relay
- Power Factor Correction Capacitors LKT dry-type with four safety features

Application Recommendations

Power Factor Correction Systems type LSK-P are a perfect solution for small and medium-sized firms and buildings and also for power factor correction at sub-distribution boards.

They are suitable for supply networks with harmonic distortion according to EN 61000-2-4 class 2. They are available as follows:

Version	Detuning factor	Resonance frequency
P1	p = 14 %	134 Hz
P7	p = 7 %	189 Hz
P8	p = 8 %	177 Hz

Power Range

Power Factor Correction System in sheet steel cabinet:

- 17.5 to 100 kvar

Construction

The ready-for-connection Power Factor Correction System consists of a pre-assembled mounting plate, type LSP-P and the suitable sheet steel cabinet.

The LSK-P contains:

- Self-healing LKT type power capacitors with low-loss self-healing dielectric made from segmented metallised polypropylene film. Filled with a PCB-free filler. With discharge resistors, as per EN 60831-1 and -2 as well as IEC 60831-1 and -2
- Heavy duty Capacitor Switching Contactors
- Harmonic Filter Reactors with overtemperature switch
- Fuse links, 3-pole, size NH00
- Control terminal strip with control fuse and thermal trip contact for safety shutdown
- Intelligent Power Factor Control Relay of the PQC series

Installation Site

The place of installation must comply with the requirements of the ingress protection and ambient temperature concerned.

Regulations

For installation and connection of Power Factor Correction Capacitors in Germany the following regulations must be complied with: VDE 0100, VDE 0105, VDE 0560 Part 46 and VDE 0106 Part 100 (German Association of Electrical Engineers). In other countries the equivalent local regulations must be followed.

Connection

The power cable and the CT cable enter the bottom of the cabinet through cable glands or rubber sleeves. The power cable is connected directly to the NH fuse base, the cable from the current transformer to the terminal strip.

System Expansion

An extension of the system is possible by adding LSKZ-P extension units. This extension unit will be integrated in the existing control circuit via the control cable (supplied with the extension unit).

Technical Data

Design	Sheet steel wall cabinet with door right hinged
Rated voltage	400 V/50 Hz
Rated voltage of capacitors	440 V/50 Hz
Ambient temperature	–5 °C to +35 °C
Humidity	Max. 90 %, no condensation
Cabinet colour	RAL 7035
Standards	EN 60831-1 and -2 IEC 60831-1 and -2 EN 61921 IEC 61921 EN 61439-1 and -2 IEC 61439-1 and 2

Important Notes

For further information on power factor correction and harmonics please refer to our “Manual of Power Quality”.

FRAKO systems are designed for connecting 5 core cables. If a 4-core cable is used, a jumper must be fitted to connect PE and N, or a control transformer must be installed.

Subject to technical changes / © FRAKO GmbH / www.frako.com

Version: P1 (Detuning factor p = 14 %)

Article-No.	Type	Rated power [kvar]	Stage power [kvar]	Switching sequence	Dimensions Width [mm]	Dimensions Height [mm]	Dimensions Depth [mm]	Weight approx. [kg]	Protection IP
Power Factor Correction Systems in sheet steel wall cabinets, rated mains voltage: 400 V / 50 Hz Type series: LSK …-3-P1									
34-14566	LSK 21,88-3,13-111-400-3-620-P1	21.88	3.13	1:2:4	600	1211	311	97	20
34-14567	LSK 25-6,25-21-400-3-620-P1	25	6.25	1:1:2	600	1211	311	102	20
34-14568	LSK 31,25-6,25-12-400-3-620-P1	31.25	6.25	1:2:2	600	1211	311	105	20
34-14569	LSK 34,38-3,13-112-400-3-620-P1	34.38	3.13	1:2:4:4	600	1211	311	109	20
34-14570	LSK 43,75-6,25-111-400-3-620-P1	43.75	6.25	1:2:4	600	1211	311	119	20
34-14571	LSK 46,88-3,13-1111-400-3-620-P1	46.88	3.13	1:2:4:8	600	1211	311	125	20
34-14572	LSK 50-6,25-211-400-3-620-P1	50	6.25	1:1:2:4	600	1211	311	130	20
34-14573	LSK 50-12,5-21-400-3-620-P1	50	12.5	1:1:2	600	1211	311	125	20
34-14575	LSK 62,5-12,5-12-400-3-620-P1	62.5	12.5	1:2:2	600	1211	311	138	20
34-14576	LSK 68,75-6,25-112-400-3-620-P1	68.75	6.25	1:2:4:4	600	1211	311	150	20
34-14577	LSK 75-12,5-11A-400-3-620-P1	75	12.5	1:2:3	600	1211	311	157	20
34-14578	LSK 75-12,5-22-400-3-620-P1	75	12.5	1:1:2:2	600	1211	311	153	20
34-14579	LSK 75-25-11-400-3-620-P1	75	25	1:2	600	1211	311	151	20
34-14580	LSK 87,5-12,5-111-400-3-620-P1	87.5	12.5	1:2:4	600	1211	311	159	20
34-14581	LSK 100-16,67-11A-400-3-620-P1	100	16.67	1:2:3	600	1211	311	170	20
Power Factor Correction Systems, extension units in sheet steel wall cabinets, rated mains voltage: 400 V / 50 Hz Type series: LSKZ …-3-P1									
34-14121	LSKZ 50-50-1-400-3-P1	50	50	1	600	1211	311	119	20
34-14131	LSKZ 75-25-11-400-3-P1	75	25	1:2	600	1211	311	150	20

Other rated voltages, frequencies and power ratings on request.

Recommended supply lead cross sections: please refer to the technical annex (page 137 ff.).

Version: P7 (Detuning factor p = 7 %)

Article-No.	Type	Rated power [kvar]	Stage power [kvar]	Switching sequence	Dimensions Width [mm]	Dimensions Height [mm]	Dimensions Depth [mm]	Weight approx. [kg]	Protection IP
Power Factor Correction Systems in sheet steel wall cabinets, rated mains voltage: 400 V / 50 Hz Type series: LSK …-3-P7									
34-14582	LSK 17,5-2,5-111-400-3-620-P7	17.5	2.5	1:2:4	600	1211	311	85	20
34-14583	LSK 25-5-12-400-3-620-P7	25	5	1:2:2	600	1211	311	91	20
34-14584	LSK 25-6,25-21-400-3-620-P7	25	6.25	1:1:2	600	1211	311	87	20
34-14585	LSK 30-5-11A-400-3-620-P7	30	5	1:2:3	600	1211	311	94	20
34-14586	LSK 31,25-6,25-12-400-3-620-P7	31.25	6.25	1:2:2	600	1211	311	92	20
34-14587	LSK 43,75-6,25-111-400-3-620-P7	43.75	6.25	1:2:4	600	1211	311	97	20
34-14588	LSK 46,88-3,13-1111-400-3-620-P7	46.88	3.13	1:2:4:8	600	1211	311	102	20
34-14589	LSK 50-6,25-211-400-3-620-P7	50	6.25	1:1:2:4	600	1211	311	104	20
34-14590	LSK 50-12,5-21-400-3-620-P7	50	12.5	1:1:2	600	1211	311	100	20
34-14592	LSK 52,5-7,5-111-400-3-620-P7	52.5	7.5	1:2:4	600	1211	311	107	20
34-14593	LSK 60-10-11A-400-3-620-P7	60	10	1:2:3	600	1211	311	111	20
34-14594	LSK 62,5-12,5-12-400-3-620-P7	62.5	12.5	1:2:2	600	1211	311	107	20
34-14595	LSK 68,75-6,25-112-400-3-620-P7	68.75	6.25	1:2:4:4	600	1211	311	117	20
34-14596	LSK 75-12,5-11A-400-3-620-P7	75	12.5	1:2:3	600	1211	311	117	20
34-14597	LSK 75-12,5-22-400-3-620-P7	75	12.5	1:1:2:2	600	1211	311	122	20
34-14598	LSK 75-25-11-400-3-620-P7	75	25	1:2	600	1211	311	112	20
34-14599	LSK 87,5-12,5-111-400-3-620-P7	87.5	12.5	1:2:4	600	1211	311	122	20
34-14600	LSK 93,75-6,25-1111-400-3-620-P7	93.75	6.25	1:2:4:8	600	1211	311	131	20
34-14601	LSK 100-12,5-211-400-3-620-P7	100	12.5	1:1:2:4	600	1211	311	134	20
34-14602	LSK 100-16,67-11A-400-3-620-P7	100	16.67	1:2:3	600	1211	311	135	20
34-14603	LSK 100-25-21-400-3-620-P7	100	25	1:1:2	600	1211	311	129	20
Power Factor Correction Systems, extension units in sheet steel wall cabinets, rated mains voltage: 400 V / 50 Hz Type series: LSKZ …-3-P7									
34-14127	LSKZ 50-50-1-400-3-P7	50	50	1	600	1211	311	100	20
34-14128	LSKZ 60-30-2-400-3-P7	60	30	1:1	600	1211	311	109	20
34-14120	LSKZ 75-25-11-400-3-P7	75	25	1:2	600	1211	311	113	20
34-14129	LSKZ 90-30-3-400-3-P7	90	30	1:1:1	600	1211	311	115	20
34-14130	LSKZ 100-50-2-400-3-P7	100	50	1:1	600	1211	311	120	20

Versions with an 8 % choke factor are available with the same corrective power and configuration of the capacitance stages.
Other rated voltages, frequencies and power ratings on request.
Recommended supply lead cross sections: please refer to the technical annex (page 137 ff.).

Subject to technical changes / © FRAKO GmbH / www.frako.com

Options and accessories for Power Factor Correction Systems type LSK-P 400V, 50 Hz

Article-No.	Type	Description
Options, mounted and wired ready for operation		
S34-5540	-650- (instead of -620)	Power Factor Control Relay PQC-12/1 instead of PQC-6/1
S34-5508	-Li	Cabinet door with door left hinged
S34-0060	-SO	Special painting outside (RAL-Scale)
S34-5032	-54	Ingress protection IP54
S34-5511	-S131	With connection at the top instead of fuse base ≤ 60 kvar = 1 pc. > 60 kvar = 2 pcs
S34-0103	-LSA	Switch disconnector* three-pole, 160 A in cable entry compartment ≤ 60 kvar
S34-0104	-LSA	Switch disconnector* three-pole, 250 A in cable entry compartment > 60 kvar
S34-0039	-S56	Control switch (On/Off) fitted and connected (requirement for power factor correction systems installed in Switzerland)
S34-5535	-S19	Control phase + N via a protective motor switch (option for France)
S34-5537	-S119 (+ Power)	Control transformer set 315 VA incl. primary and secondary fuses
S34-5073	-SO (+ Description)	Voltage meter with switch
S34-0040	-S66	Summation current transformer 5+5/5A
S34-0081	-S66	Summation current transformer 5+5+5/5A
Accessories, loose		
34-80021	WB LSK-10	Wall distance assembly set 10 mm
34-80018	WB LSK-40	Wall distance assembly set 40 mm
34-80194	KR-LSK-3-200	Fixed base (Height = 200 mm; Depth = 300 mm)

*) Switch disconnector can be operated from the outside

Other options and accessories on request

Dimensions

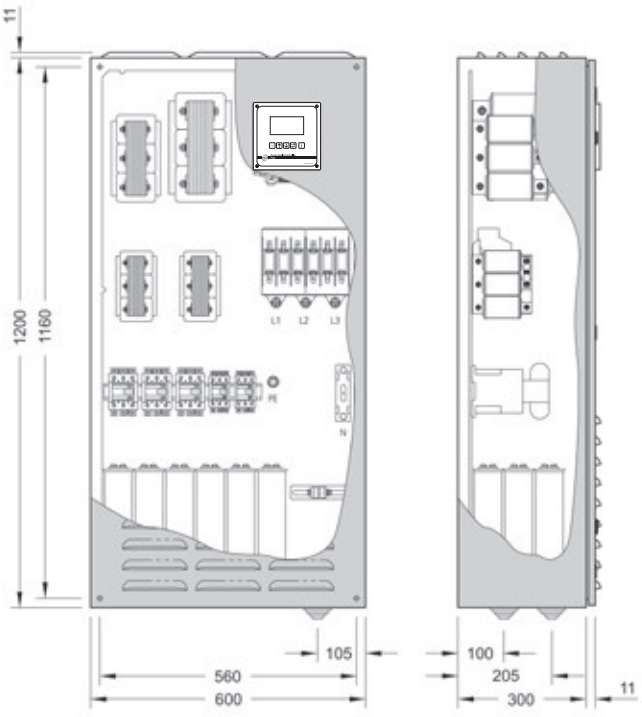

Dimensional drawing LSK-P (17.5 bis 100 kvar)

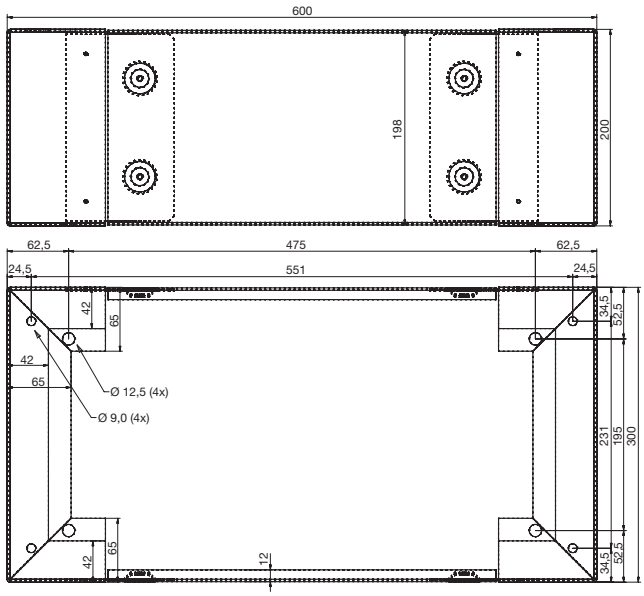

Dimensional drawing base LSK-3

All dimensions in mm